60cmx110cmx40cm-240G

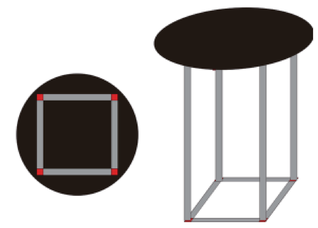

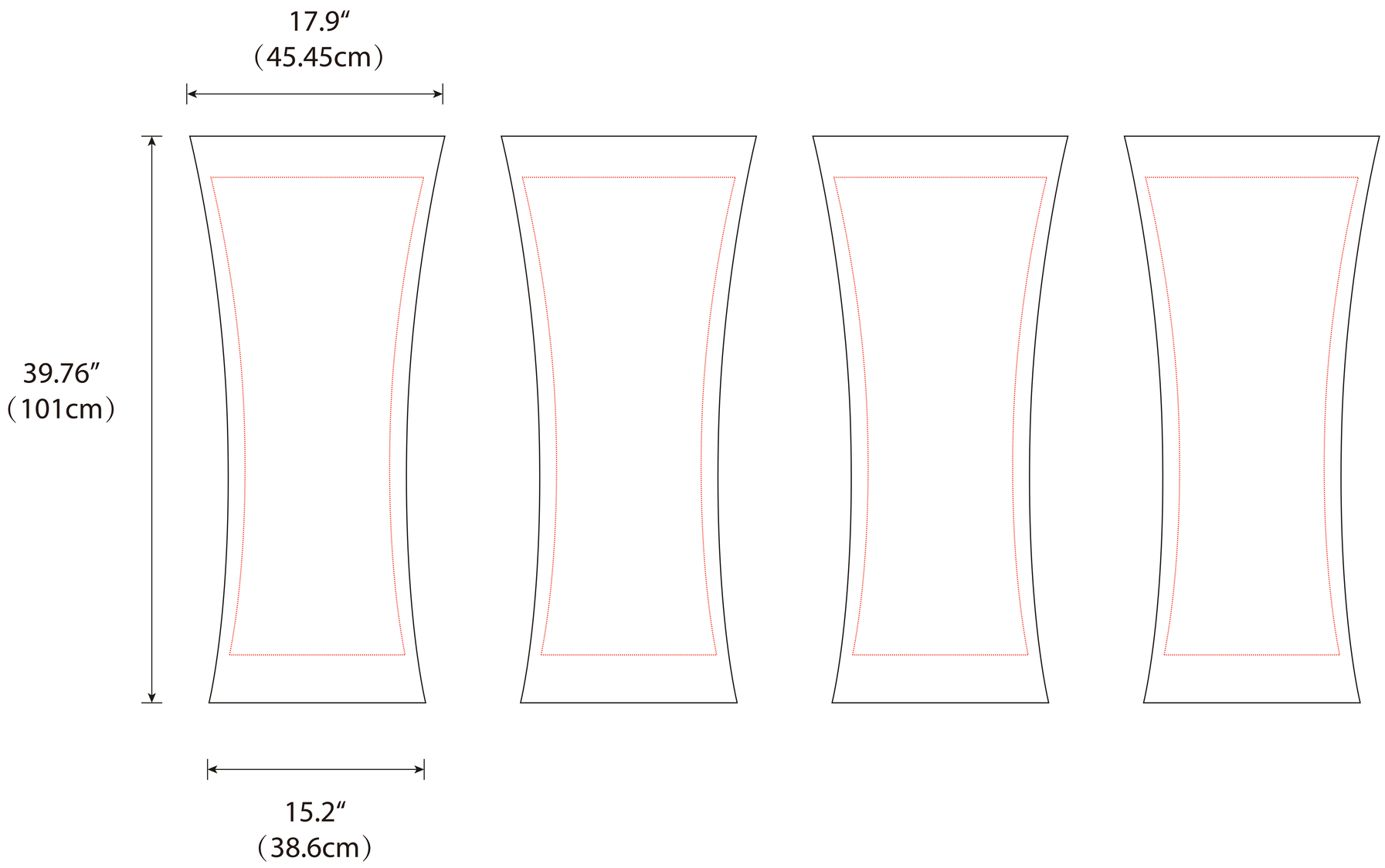
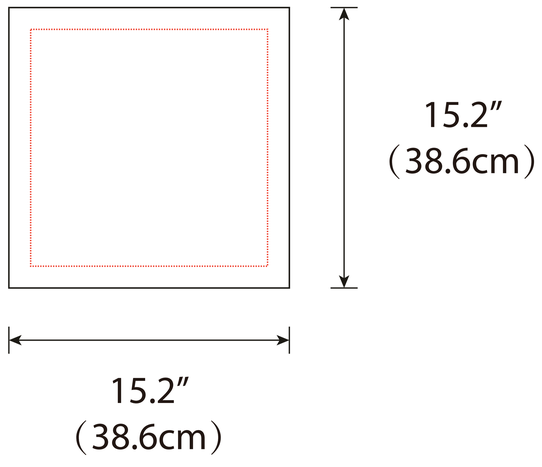
Bottom